MODEL # WST-OF
SERIAL #
SERIAL #

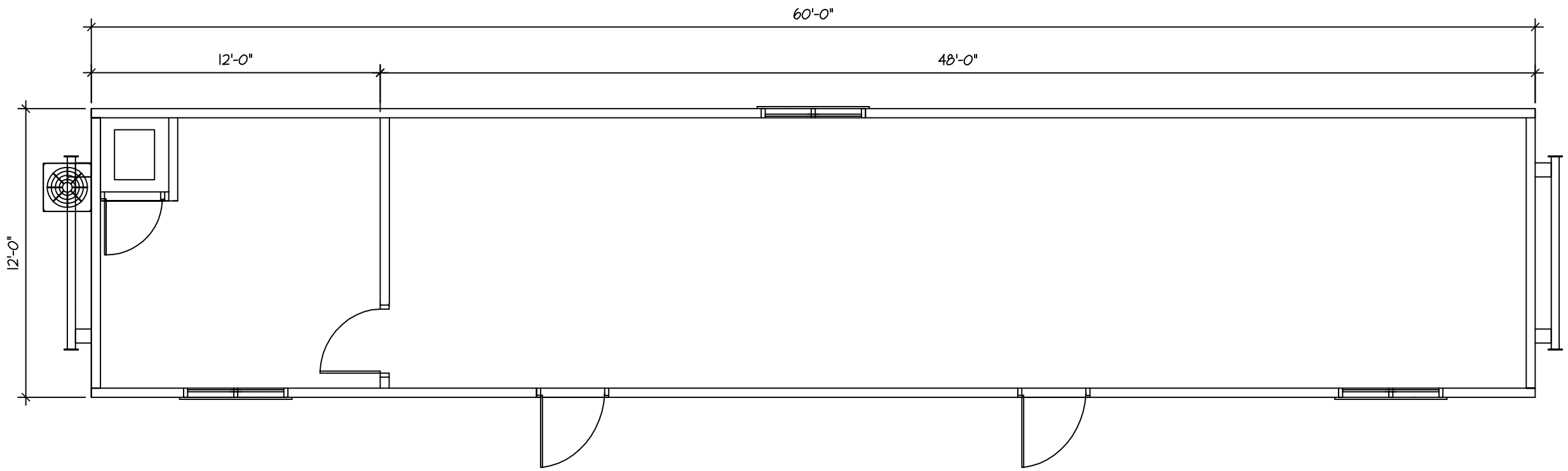

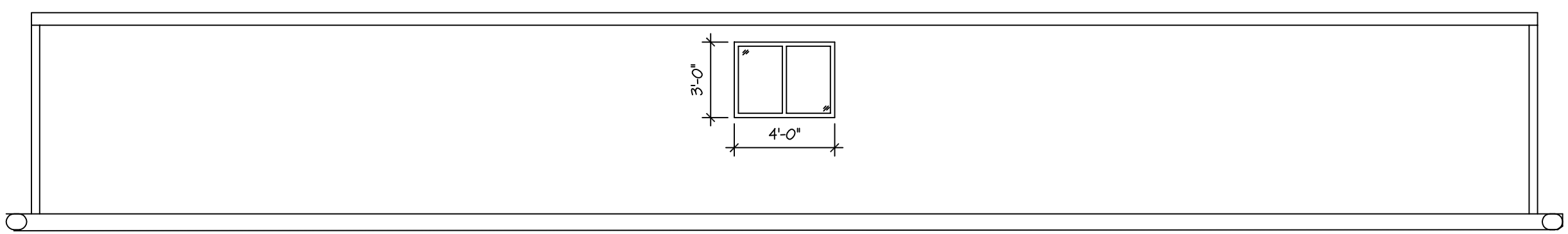

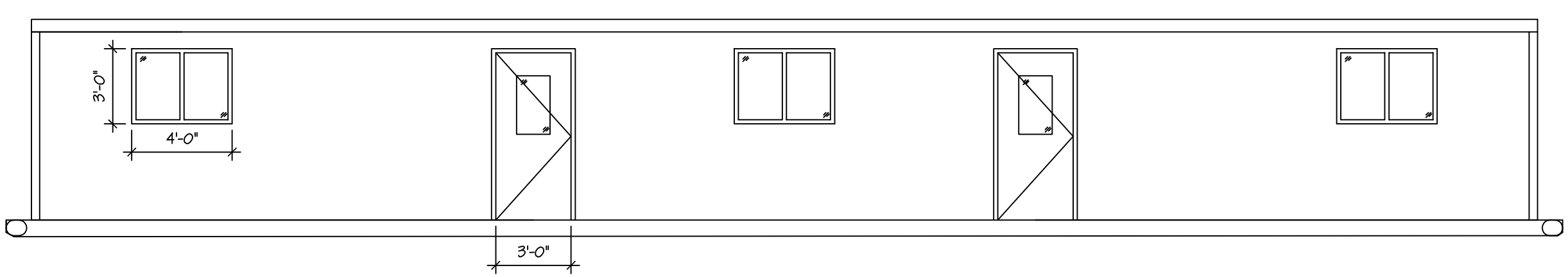

Copyright © 2004, greensmart HOMES INC.

NOTES:

- Verify all dimensions, elevations, and datum; report any errors and/or discrepancies to the designer prior to construction.
- All drawings remain the property of the designer.
- This design and drawing may not be reproduced without permission of the designer.
- Do not scale drawings.
- This drawing supersedes previous issues.

PRIME:

greensmart HOMES INC.
Sustainable Housing

CONSULTANT:

Buildtech Resources Ltd.
P.O. Box 78064
6655 178 St.
Edmonton, AB.
T5T 6A1
P: (780) 951-9449
F: (780) 455-3393
buildtech@primus.ca

CONSULTANT:

REVISIONS

DATE	DESCRIPTION	BY

DRAWING REFERENCE SYMBOLS:

- 1 / A.1 — DETAIL NUMBER REFERENCE / DRAWING NUMBER WHERE LOCATED
- 1 / A.1 — SECTION DETAIL REFERENCE / DRAWING NUMBER WHERE LOCATED
- A / A.1 — BUILDING SECTION REFERENCE / DRAWING NUMBER WHERE LOCATED
- A / A.1 — DRAWING NUMBER / DRAWING NUMBER WHERE LOCATED

MODEL:

DOUBLE ENGINEER
12'-0" x 60'-0"

PROJECT: (name,legal description)

GSM Office
TRAILER

TITLE:

FLOOR PLAN
SCHEDULES
ELEVATIONS

SCALE:	AS NOTED
JOB NO.:	
DRAWN:	IM
DATE:	Jan 7,2008

SHEET: S2

2872 Falaise Ave. SW (Building H2 Currie Barracks) <> Calgary AB. T3E 7J2
T: 403.240.7427 <> www.greensmarthomes.com <> F: 403.228.5848

Copyright © 2004, greensmart HOMES INC.